SEKISUI

VU/AE EQUAL SOCKET

COMPLY WITH JIS K 6739

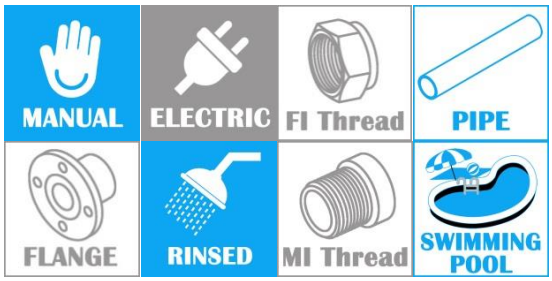

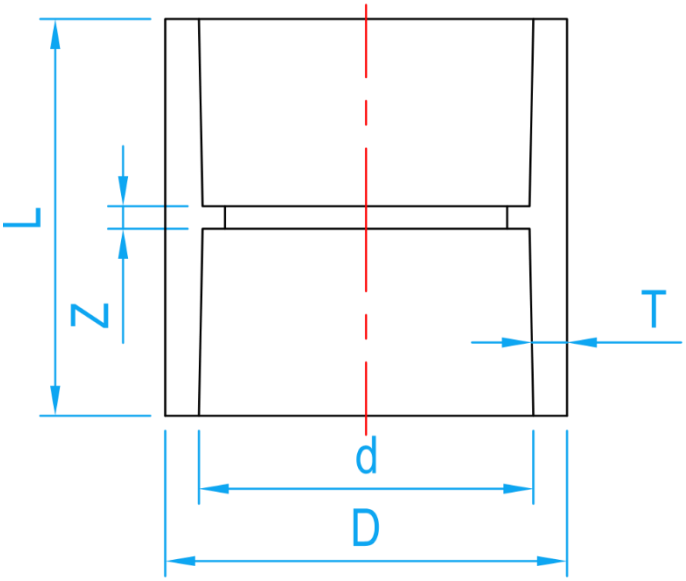

CROSS SECTIONAL VIEW

DIMENSIONS

SKU	DN	d (mm)	D (mm)	T-Min (mm)	Z (mm)	L (mm)	WEIGHT (Kg)	PCS/CTN
AEES035	35	38.25±0.25	44	2.2	3	39	0.026	540
AEES042	42	48.5±0.3	54	2.2	3	47	0.036	280
AEES050	50	60.5±0.3	67	2.2	3	53	0.055	160
AEES065	65	76.6±0.3	83	2.5	3	73	0.101	74
AEES080	80	89.6±0.3	97	3.0	4	84	0.156	70
AEES100	100	114.8±0.4	124	3.5	4	104	0.281	34
AEES125	125	140.9±0.4	151	4.5	4	134	0.528	14
AEES150	150	166.1±0.5	178	5.5	4	164	0.960	12
AEES200	200	217.3	227	5.5	5	215	1.628	8
AEES250	250	268.6	280	6.5	6	270	2.625	2
AEES300	300	319.8	333	7.5	7	320	4.743	2
AEES350	350	373.0	389	9.3	8	410	9.260	1
AEES400	400	423.0	444	10.5	13	413	10.775	1

Notes: 1. The tolerance for Z is ±2mm.
2. L is the standard dimension.

Copyright. All Rights Reserve. Liang Chew Hardware Pte Ltd.
We are constantly seeking product improvements. Therefore, its products are subject to change if deemed necessary.